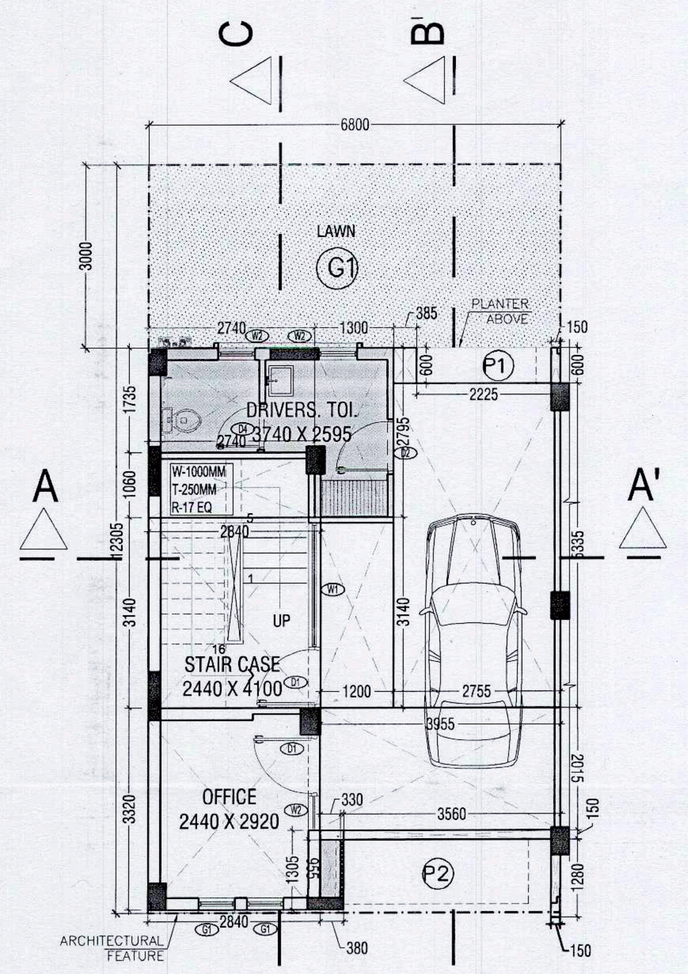

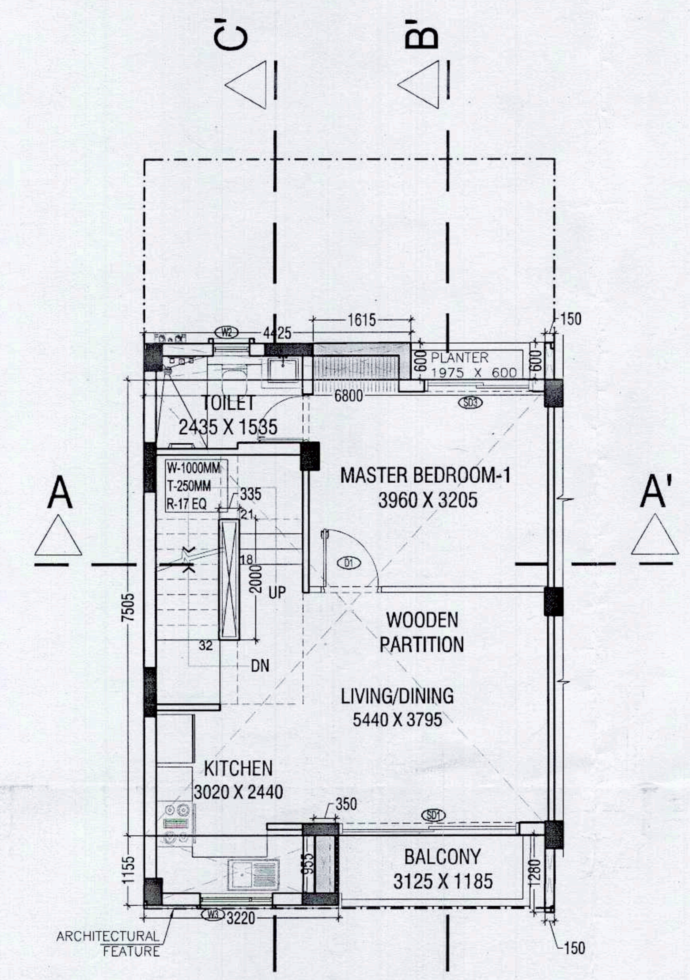

FIRST FLOOR PLAN

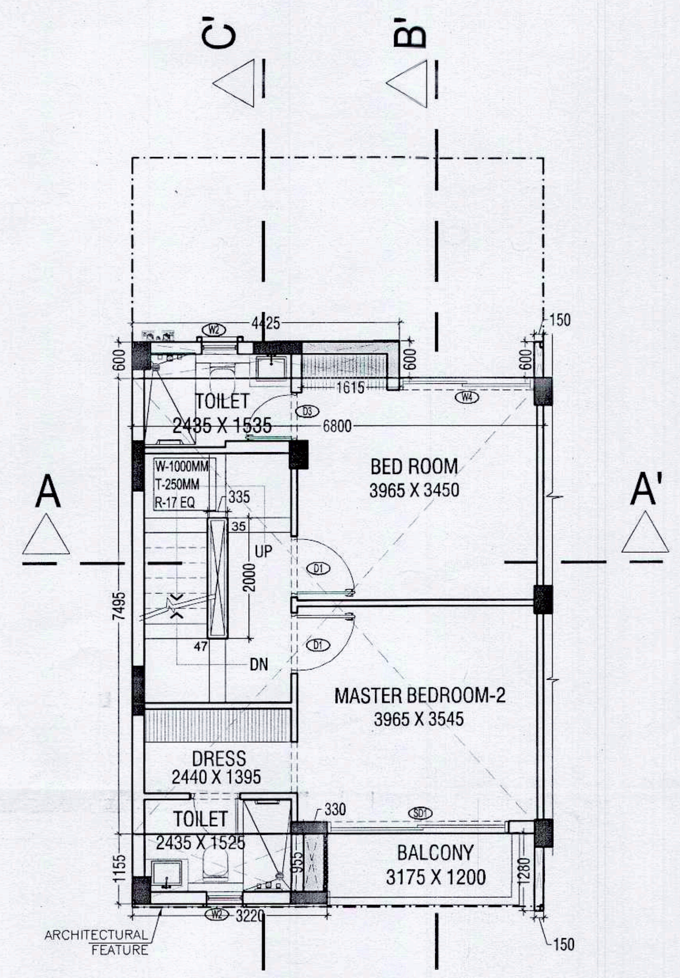

SECOND FLOOR PLAN

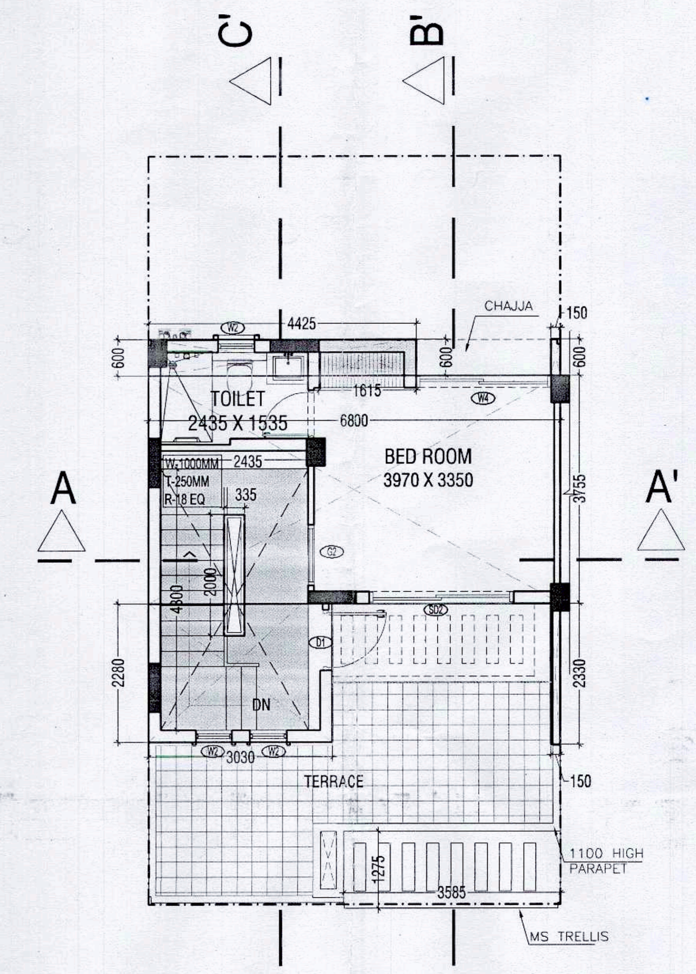

THIRD FLOOR PLAN

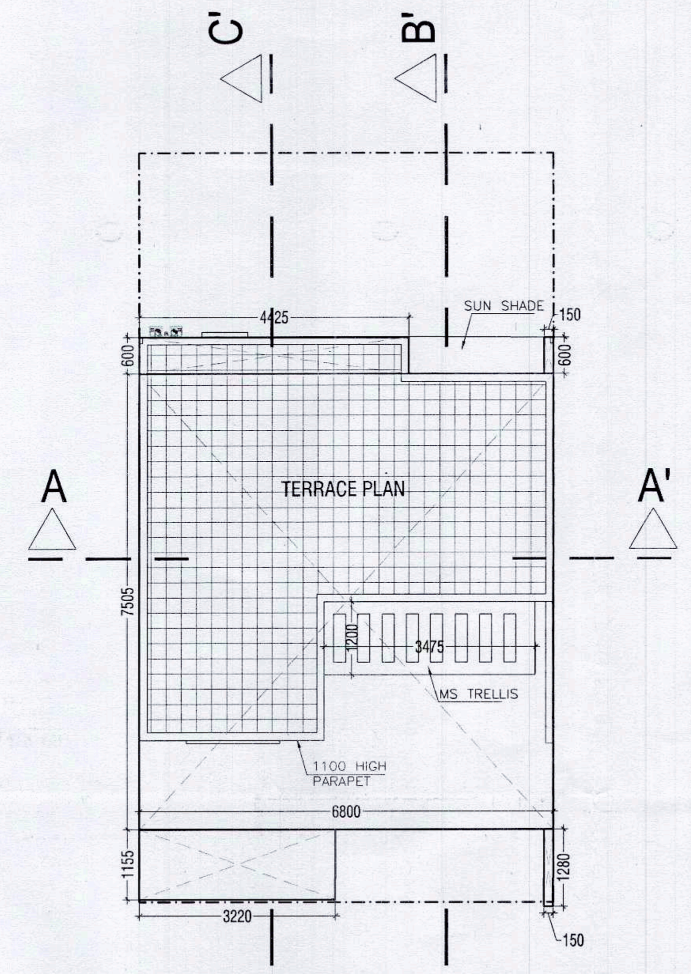

TERRACE FLOOR PLAN

Notes

THIS DRAWING IS APPLICABLE FOR VILLA V1-1,10,11,24,57,64,65,86,103, 112,131,132,141,142,151,168,169,206, 227,236,237.

TOTAL NUMBER = 21

APPROVED

BP-3090531/7995/28/10/2016

D.G.M. (... & Arch.)

Gen. Manager (Plng. & Arch.)

S.M. (Plng.)

OPENING SCHEDULE

SNO.	NOMENCLATURE	WIDTH	HEIGHT	CILL	LINTEL
1	SD1	3000	2400	00	2400
2	SD2	2380	2400	00	2400
3	SD3	1800	2400	00	2400
4	D1	1000	2400	00	2100
5	D2	900	2400	00	2100
6	D3	800	2400	00	2100
7	D4	750	2400	00	2100
8	W1	2040	1500	900	2400
9	W2	600	1370	1080	2400
10	W3	1200	1450	1000	2400
11	W4	2225	1650	750	2400
12	W5	1000	1650	750	2400
13	G1	600	1950	450	2400
14	G2	1000	2400	00	2400

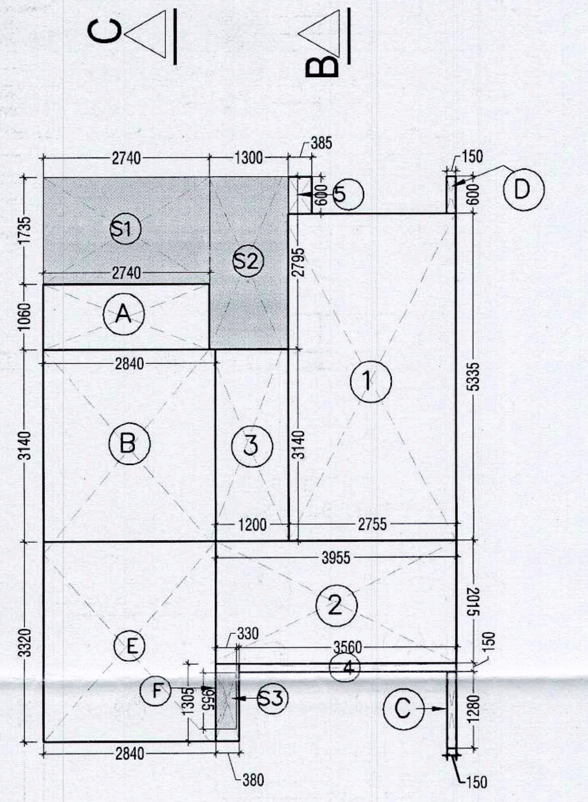

STILT FLOOR AT GROUND LEVEL AREA DIAGRAM

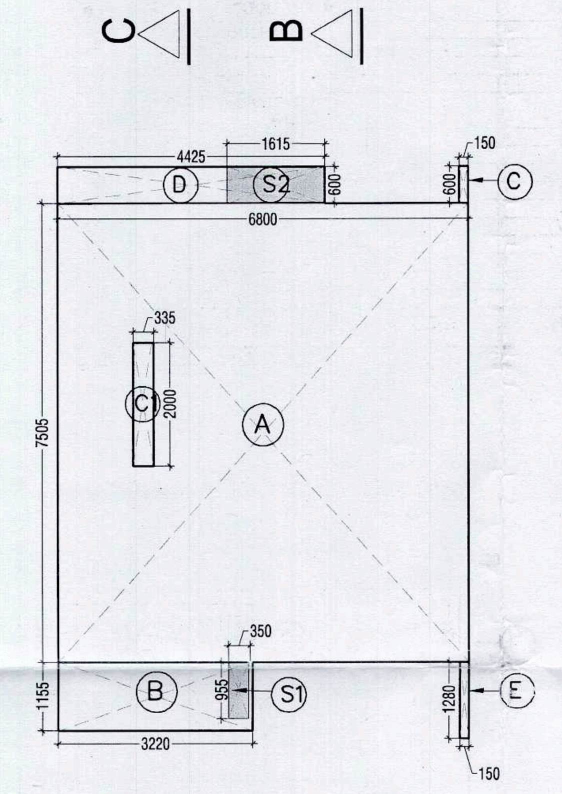

FIRST FLOOR AREA DIAGRAM

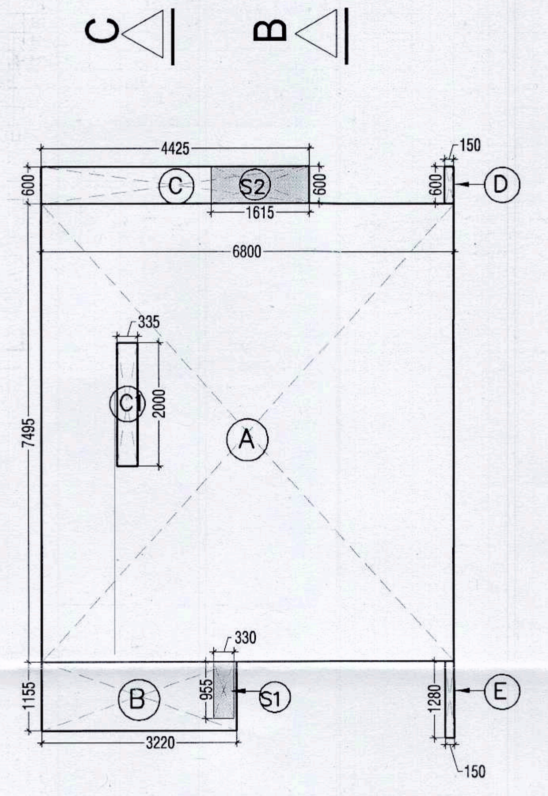

SECOND FLOOR AREA DIAGRAM

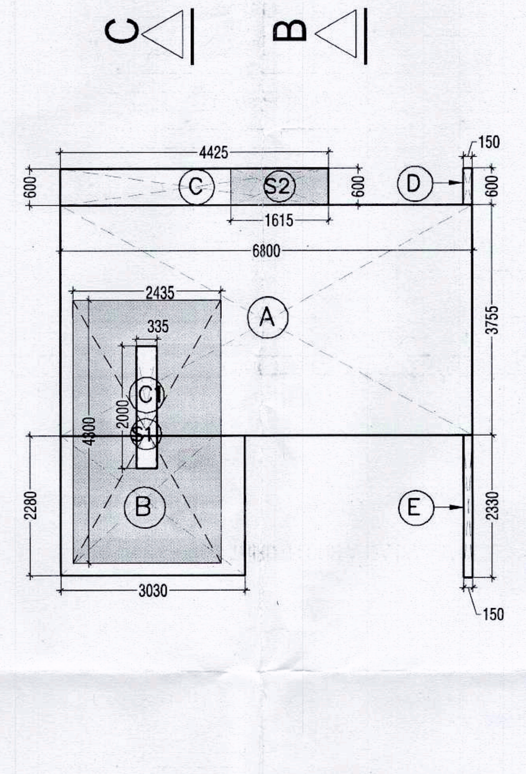

THIRD FLOOR AREA DIAGRAM

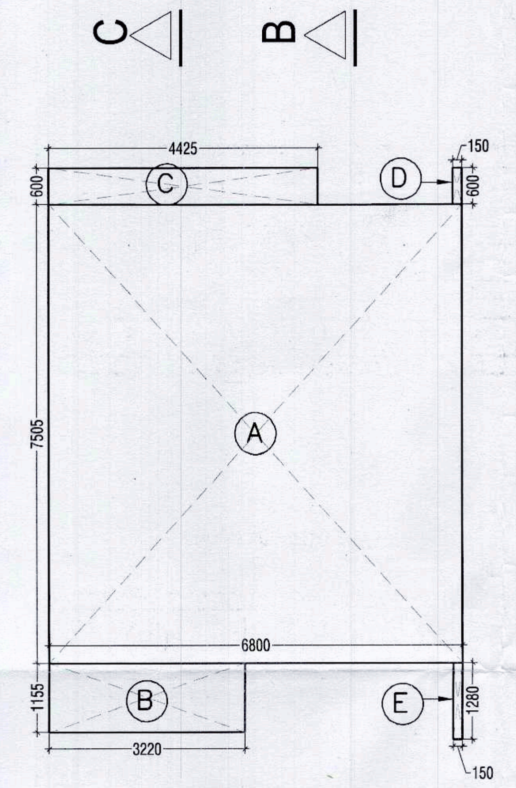

GROUND COVERAGE

AREA DETAILS OF VILLA V1

S.NO.	FLOOR	GROUND COVERAGE AREA (Sq.M.)	15% FAR AREA (Sq.M.)	FAR AREA (Sq.M.)
1	GROUND FLOOR	57.656	8.737	21.714
2	FIRST FLOOR		1.284	55.702
3	SECOND FLOOR		1.284	55.702
4	THIRD FLOOR		10.770	24.767
	TOTAL	57.656	22.075	157.885

TOTAL AREA DETAILS OF THIS TYPE OF VILLA

S.NO.	AREA TYPE	NO. OF VILLA	AREA OF 1 VILLA	TOTAL AREA
1	GROUND COVERAGE	21.000	57.656	1210.776
2	F.A.R		157.885	3315.585
3	15% F.A.R AREA		22.075	463.575
4	STILT AREA		27.200	571.200

STILT FLOOR AT GROUND LEVEL F.A.R AREA – VILLA V1 (100 SQ. YARD)

NO.	TYPE	WIDTH (in mm)	LENGTH (in mm)	Nos.	AREA in SqM
COVERED AREA ON FLOOR ADDITIONS					
A	RECTANGLE	1060	2740	1	2.904
B	RECTANGLE	3140	2840	1	8.918
C	RECTANGLE	150	1280	1	0.192
D	RECTANGLE	150	600	1	0.090
E	RECTANGLE	3320	2840	1	9.429
F	RECTANGLE	380	1305	1	0.496
	TOTAL ADDITIONS (A)				22.029
15% FAR AREA					
S1	RECTANGLE	2760	1735	1	4.789
S2	RECTANGLE	1300	2795	1	3.634
S3	RECTANGLE	330	955	1	0.315
	TOTAL 15% FAR AREA(B)				8.737
STILT AREA					
1	RECTANGLE	2755	5335	1	14.698
2	RECTANGLE	3955	2015	1	7.969
3	RECTANGLE	1200	3140	1	3.768
4	RECTANGLE	3560	150	1	0.534
5	RECTANGLE	385	600	1	0.231
	TOTAL STILT AREA				27.200
	F.A.R AREA ON STILT FLOOR AT GROUND LEVEL C = A				21.714

FIRST FLOOR F.A.R AREA – VILLA V1 (100 SQ. YARD)

NO.	TYPE	WIDTH (in mm)	LENGTH (in mm)	Nos.	AREA in SqM
COVERED AREA ON FLOOR ADDITIONS					
A	RECTANGLE	6800	7500	1	51.000
B	RECTANGLE	3220	1155	1	3.719
C	RECTANGLE	150	600	1	0.090
D	RECTANGLE	4425	600	1	2.655
E	RECTANGLE	150	1280	1	0.192
	TOTAL ADDITIONS (A)				57.656
15% FAR AREA					
S1	RECTANGLE	330	955	1	0.315
S2	RECTANGLE	1615	600	1	0.969
	TOTAL 15% FAR AREA(B)				1.284
CUTOUTS					
C1	RECTANGLE	335	2000	1	0.670
	TOTAL CUTOUTS (C)				0.670
	F.A.R AREA ON FIRST FLOOR (D)= A- (B+C)				55.702

SECOND FLOOR F.A.R AREA – VILLA V1(100 SQ. YARD)

NO.	TYPE	WIDTH (in mm)	LENGTH (in mm)	Nos.	AREA in SqM
COVERED AREA ON FLOOR ADDITIONS					
A	RECTANGLE	6800	7500	1	51.000
B	RECTANGLE	3220	1155	1	3.719
C	RECTANGLE	4425	600	1	2.655
D	RECTANGLE	150	600	1	0.090
E	RECTANGLE	150	1280	1	0.192
	TOTAL ADDITIONS (A)				57.656
CUTOUTS					
C1	RECTANGLE	335	2000	1	0.670
	TOTAL CUTOUTS (B)				0.670
15% FAR AREA					
S1	RECTANGLE	330	955	1	0.315
S2	RECTANGLE	1615	600	1	0.969
	TOTAL 15% FAR AREA C				1.28
	F.A.R AREA ON SECOND FLOOR (D) =A-(B+C)				55.702

THIRD FLOOR F.A.R AREA – VILLA V1 (100 SQ. YARD)

NO.	TYPE	WIDTH (in mm)	LENGTH (in mm)	Nos.	AREA in SqM
COVERED AREA ON FLOOR ADDITIONS					
A	RECTANGLE	6800	3755	1	25.534
B	RECTANGLE	2280	3030	1	6.908
C	RECTANGLE	4425	600	1	2.655
D	RECTANGLE	150	600	1	0.090
E	RECTANGLE	150	2330	1	0.350
	TOTAL ADDITIONS (A)				35.537
CUTOUTS					
C1	RECTANGLE	335	2000	1	0.670
	TOTAL ADDITIONS (B)				0.670
15% FAR AREA					
S1	RECTANGLE	2435	4300	1	10.471
S2	RECTANGLE	1615	600	1	0.969
	TOTAL 15% FAR AREA (C-B)				10.77
	F.A.R AREA ON THIRD FLOOR (D) =A-C				24.767

GROUND COVERAGE – VILLA 100 SQ.YARD

NO.	TYPE	WIDTH (in mm)	LENGTH (in mm)	Nos.	AREA in SqM
COVERED AREA ON FLOOR ADDITIONS					
A	RECTANGLE	6800	7500	1	51.000
B	RECTANGLE	3220	1155	1	3.719
C	RECTANGLE	4425	600	1	2.655
D	RECTANGLE	150	600	1	0.090
E	RECTANGLE	150	1280	1	0.192
	TOTAL ADDITIONS (A)				57.656
	TOTAL GROUND COVERAGE (B) = A				57.656

GREEN AREA					
G1	RECTANGLE	6800	3000	1	20.400
	TOTAL GREEN AREA (A)				20.400
PARKING AREA					
	STILT AREA				27.200
P1	RECTANGLE	2225	600	1	1.335
P2	RECTANGLE	3560	1280	1	4.557
	TOTAL PARKING AREA (A)				33.092

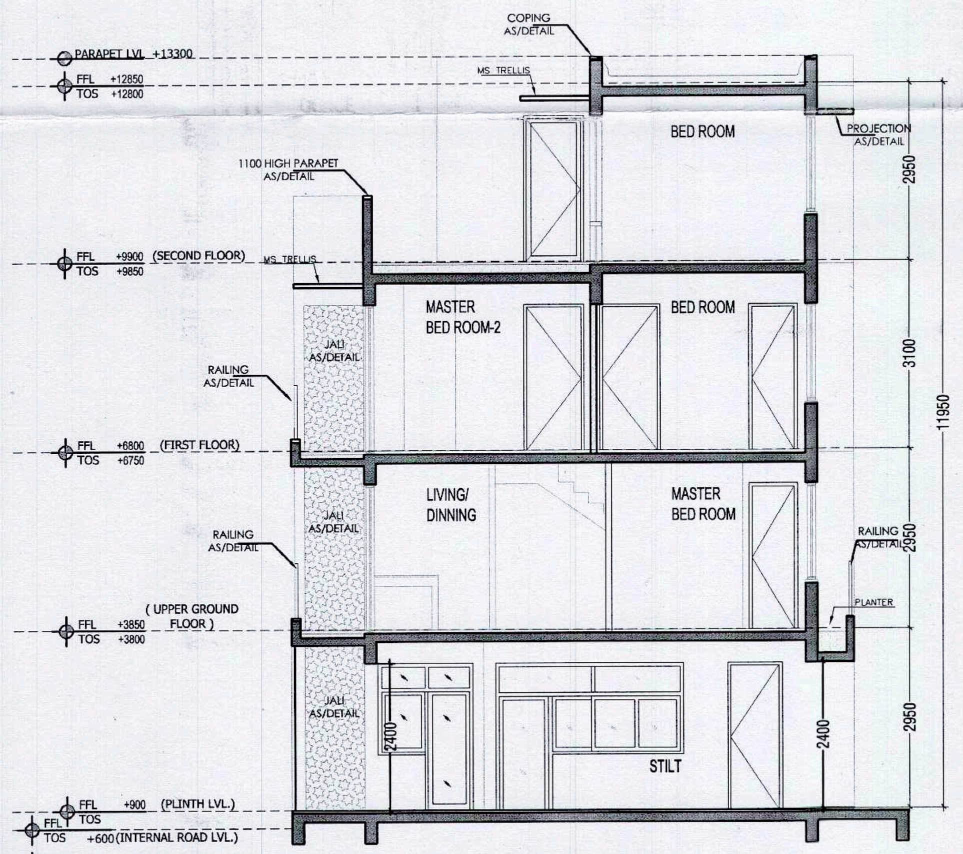

SECTION B-B'

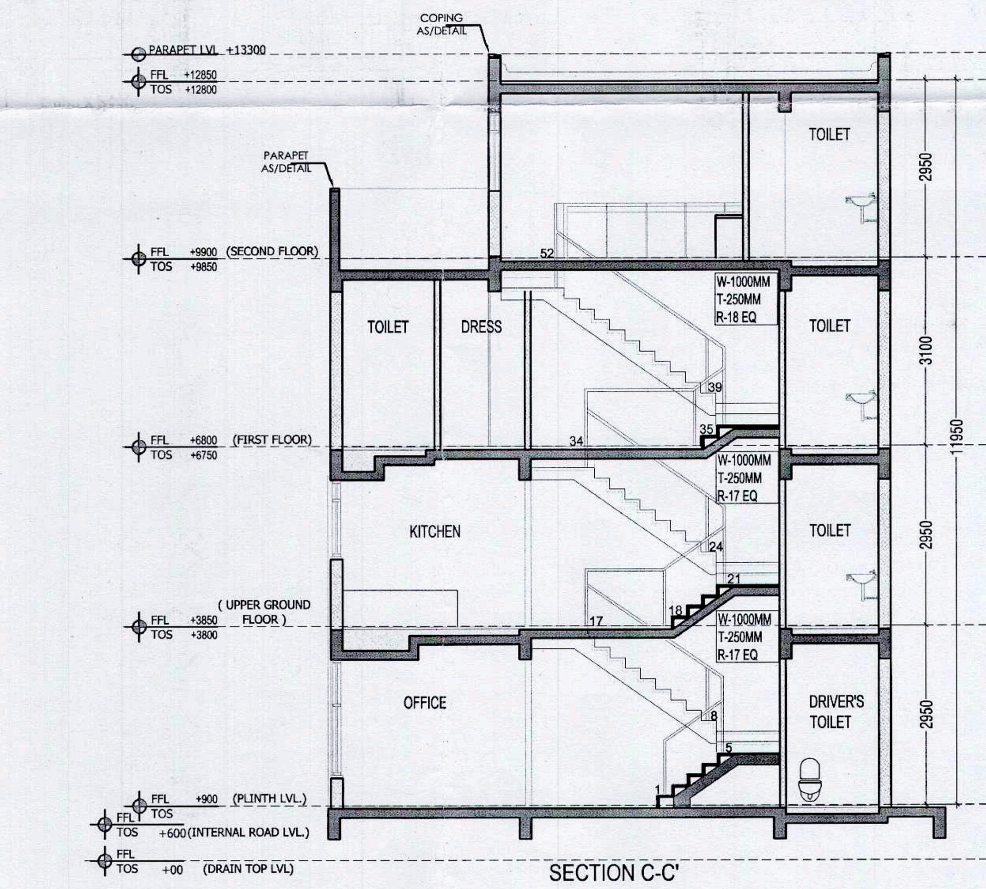

SECTION C-C'

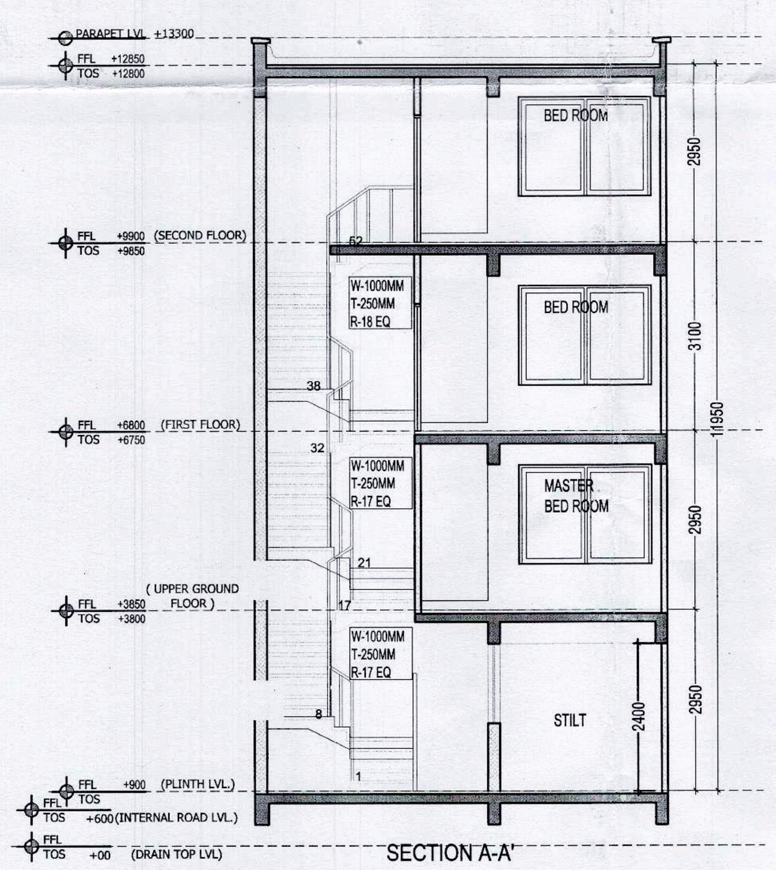

SECTION A-A'

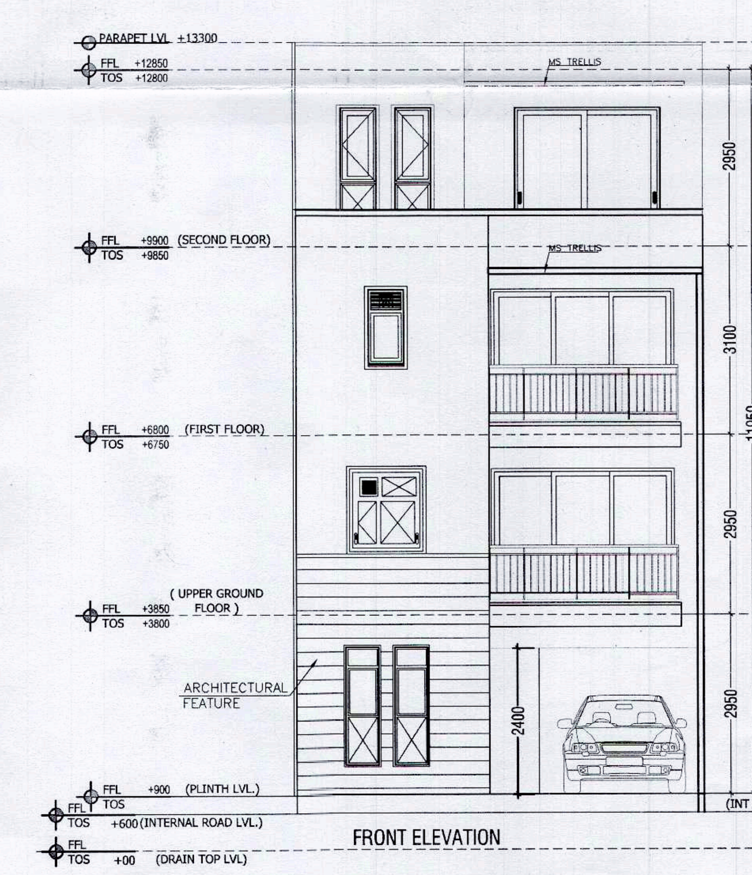

FRONT ELEVATION

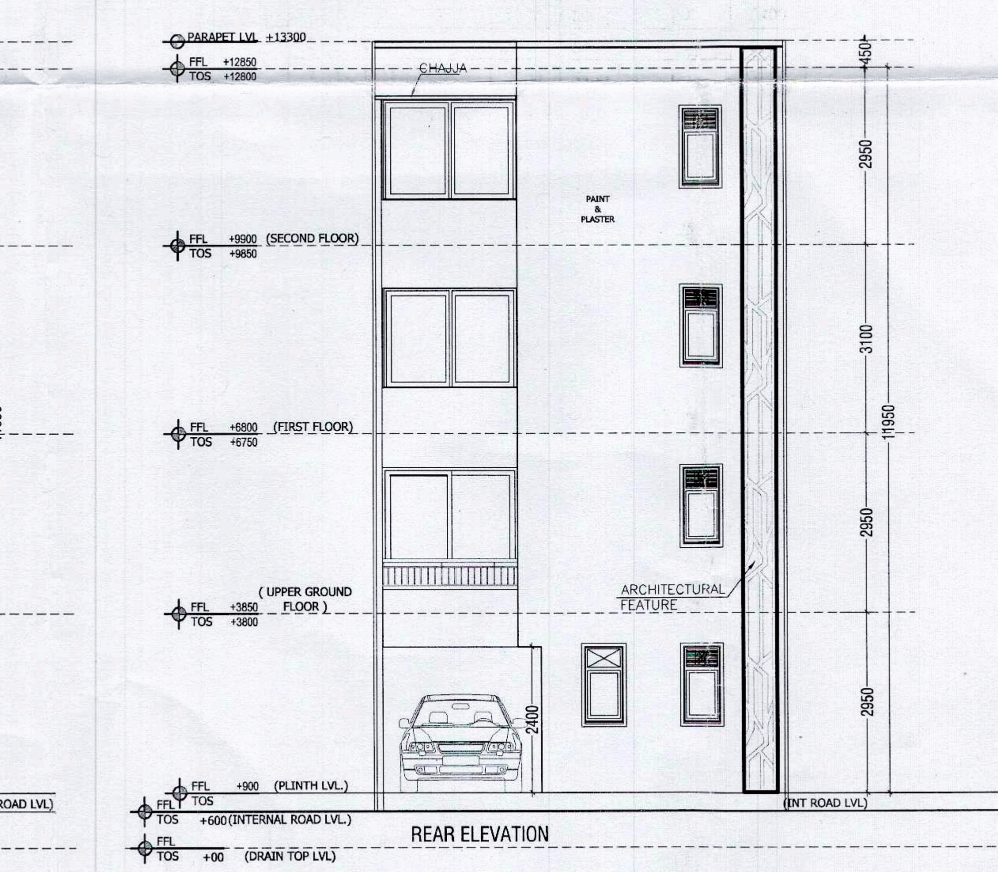

REAR ELEVATION

Key Plan

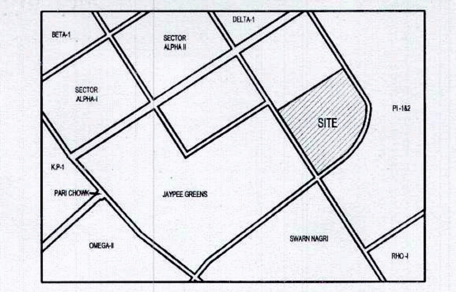

Architects Signature

Labib Alam, Architect
Council of Architecture
Registration No.: CA/2001/27447

Owner's Signature

A R LANDCRAFT LLP
Authorised Signatory

Clients

M/S AR Landcraft LLP

Services Consultant

Consummate Engineering Services (P) Ltd.
Noida Office : B - 67, Sector - 67, Noida - 201 301
e mail : mail@cespl.in

Architects

ARCOP ASSOCIATES
A-15, PAMPOSH ENCLAVE
New Delhi-110 048

Project title

PROPOSED RECREATIONAL ENTERTAINMENT PARK AT PLOT NO. REP.1 SECTOR - 27 GREATER NOIDA,(U.P.) BELONGING TO M/S A R LANDCRAFT LLP

Drawing Title

VILLA V1(100SQ.YD.) PLANS, ELEVATIONS, SECTIONS & AREA CHART (TYPE -1)

Job No.		Drawing No.
Drawn	Checked	A-07
AASHIMA	LABIB	
Date	Scale	Revisions
01.08.2016	1:100	0

Sheet:A1